Temposonics®

Magnetostrictive Linear Position Sensors

Model FH – Follower Housing Accessory
Data Sheet

– All stainless steel construction and sealed for reliability
– No oil or hazardous chemicals needed
– Light-weight yet rugged
– ROHS compliant
– 150 °C rated

Installation example:
with R-Series V sensor,
clamps 201 985 and bellows 201 983

FH – FOLLOWER HOUSING ACCESSORY

The Temposonics® FH – Follower Housing accessory, or dummy cylinder, is a rod-and-cylinder construction where the rod can extend and retract from the housing to follow the mechanical/machine motion requiring measurement. This accessory supports any Ø 7 or Ø 10 mm rod style Temposonics® sensor with a ¾"-16 or M18 threaded flange. To meet the most demanding environments and protect the rod style sensor from physical damage, this unit is constructed using stainless steel 1.4404 (AISI 316L) which is laser welded to ensure integrity. Inside, a magnet is secured to the end of the rod and remains protected within the housing, interacting with the installed Temposonics® sensor. Optional rod ends (SAE and metric threads), mounting configurations and bellows are available for attachment and protection of of the accessory within the machine's mechanical system and for connecting with the moving part. The Follower Housing is designed to be installed in any orientation and to provide a convenient and versatile mechanical package for obtaining position feedback. For mounting on top of hydraulic cylinders there are easy to use mounting clamps.

Benefits of using the follower housing:

- Eliminates the need for expensive gun drilling and prepping of hydraulic cylinders
- Eliminates the need for complicated and custom mechanical interconnection from the machine's moving parts to a standard Temposonics® sensor
- A complete mechanical package and sensor solution, tested and supported by a single manufacturer
- Cost effective design vs. traditional tie-rod style dummy cylinder
- Less weight than a traditional tie-rod style dummy cylinder
- No oil to leak out
- Suitable for harsh applications with corrosion resistant and durable stainless steel 1.4404 (AISI 316L) vs. painted or powder coated dummy cylinders
- Supports all families of Temposonics® industrial, mobile, and liquid level sensors and their industrial interfaces
- Various mounting options to meet countless mounting challenges
- Supports standard ASME trunnion mounting and pivot blocks
- Optional bellows for fine particulate and aggressive environments

Typical Applications

The Temposonics® FH – Follower Housing accessory offers quick and easy sensor solutions for many otherwise difficult applications.

- Retrofitting or upgrading of hydraulic systems where the cylinders are not already prepared for sensors.
- Retrofitting or updating of electric actuators, providing fine resolution and precision over changing speeds and forces.
- Hazardous environments when paired with a properly rated Temposonics® sensor
- Replacing inclinometers by providing precision measurements for the pivot point motion.
- Feed rollers and saw blade positioning in wood mills
- Roll winders and unwinders in print and paper industries
- Following mechanical motion in machine tools and plastic industries
- Test stands and control systems originally designed for LVDT's
- Material transfer systems
- High temperature ovens and furnaces
- Pressing and molding machines
- In some cases, it can provide for better sensor placement for quick and convenient installation and servicing

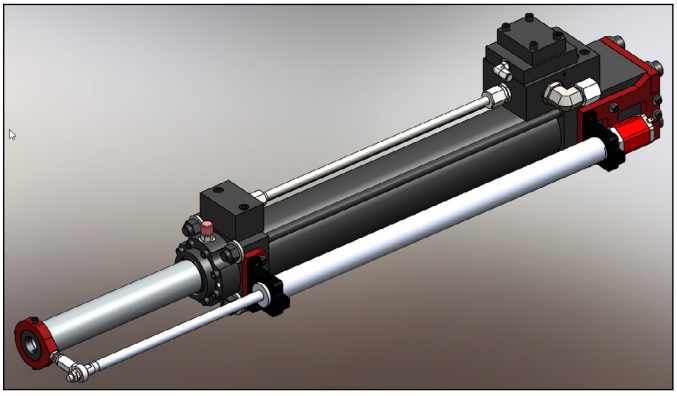

Fig. 1: Follower housing with sensor externally mounted on cylinder

Fig. 2: Examples for typical applications: Wood mills, steel mills, factory automation, off-shore, roll winders

TECHNICAL SPECIFICATIONS

Mechanical specifications	
Mating	Any threaded MTS rod style sensor including hazardous rated sensors
Matching port option	M18×1.5 or ¾"-16 UNF-2A
Housing material	Stainless steel 1.4404 (AISI 316L)
Stroke length	200…1020 mm or 8.0…40.0 in.
Diameters	Outside: 38.1 mm (1.5") Movable rod: 15.9 mm (⅝")
Housing construction	Solid end caps laser welded to housing provides sealing and structural integrity
Rod ends	SAE standard or metric threads

MOUTING STYLES

Mounting options (shown with sensor installed)	
Large clamp block (part no. 254 985) shown with the bellows option	**Clamps (2×) with edge tabs (part no. 201 986)**
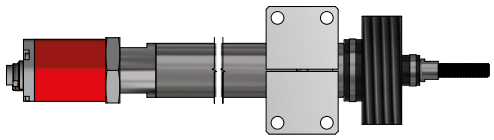	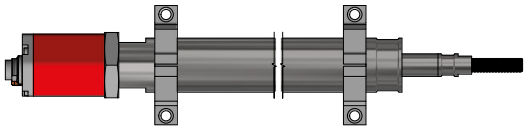
Large clamp block with trunnions (part no. 254 984) shown with the bellows option	**Clamps (2×) with center bolt-thru (part no. 201 985)**
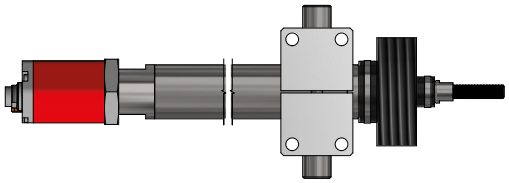	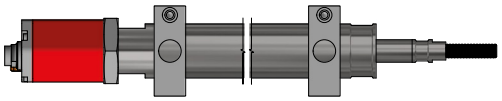
Clamp blocks can be positioned anywhere along the housing shown with the bellows option	**None (No mounting provided)**
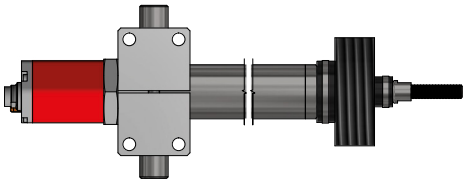	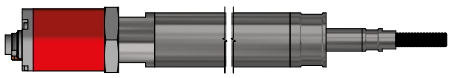

Fig. 3: Mounting options

TECHNICAL DRAWING

FH – Follower Housing, basic model

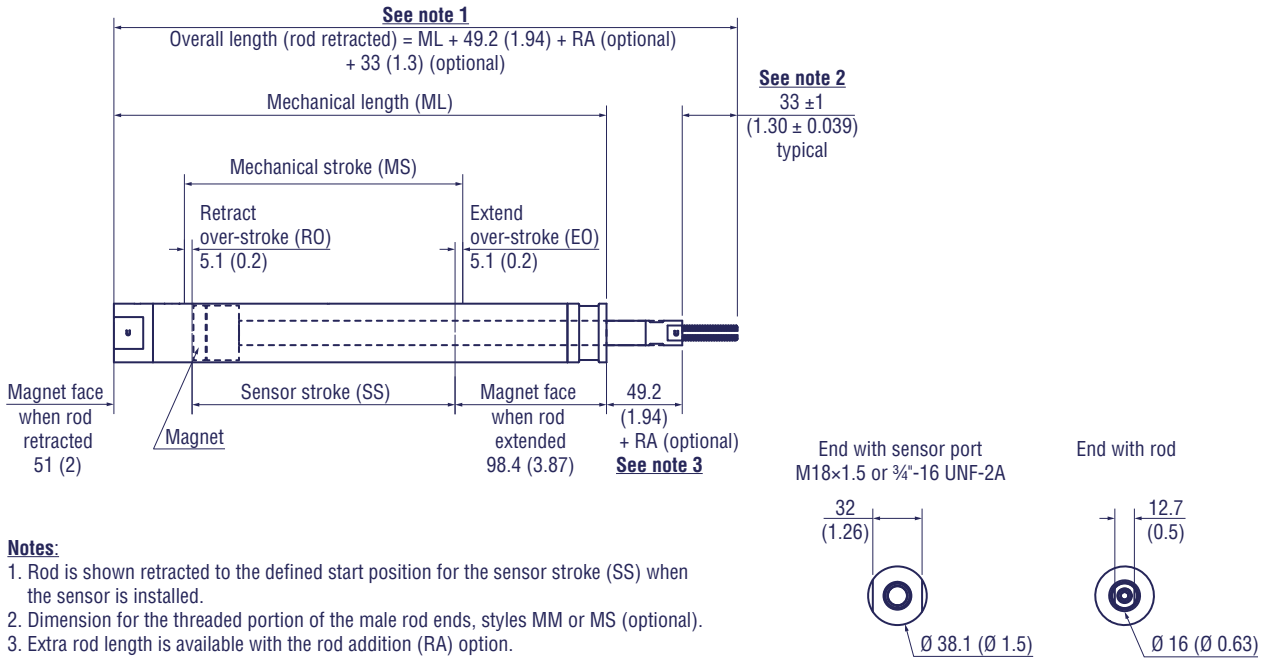

Notes:
1. Rod is shown retracted to the defined start position for the sensor stroke (SS) when the sensor is installed.
2. Dimension for the threaded portion of the male rod ends, styles MM or MS (optional).
3. Extra rod length is available with the rod addition (RA) option.

Controlling design dimensions are in millimeters and measurements in ( ) are in inches

Fig. 4: FH – Follower Housing, basic model

GLOSSARY

Name	Description	Notes
Mechanical length (ML)	Mechanical length is the overall length of the body of the follower housing. It is one of the dimensions that is specified in the FH model number (200…1020 mm (in 10 mm increments), or 8…40 in. (in 0.5 in. increments)). Specify the mechanical length value by determining how the follower housing will be mounted in the application and by the amount of measurement stroke needed.	Mechanical length should typically be ≥ to the sensor measurement stroke length + 149.4 mm (5.9 in.) and rounded up to the next 10 mm (or 0.5 in.) ordering increment.
Mechanical stroke (MS)	Mechanical stroke is the maximum amount of rod travel from fully retracted to fully extended.	The mechanical stroke dimension includes the retract over-stroke and extend over-stroke dimensions.
Sensor stroke (SS)	Sensor stroke is the defined amount of the maximum measurement stroke length available for a typical industrial sensor (having the standard null of 51 mm and dead zone of 63.5 mm). SS ≤ ML – 149.4 mm (5.9 in.)	The sensor stroke dimension is 10.2 mm less than the mechanical stroke to provide for the retract over-stroke and extend over-stroke.
Retract over-stroke (RO)	Retract over-stroke provides a 5.1 mm (0.2 in.) safety gap for the internal piston/magnet assembly in case of over travel.	With a typical industrial sensor installed, the sensor stroke range is defined to start when the rod is extended 5.1 mm from the fully retracted position.
Extend over-stroke (EO)	Extend over-stroke provides a 5.1 mm (0.2 in.) safety gap for the internal piston/magnet assembly in case of over travel.	With a typical industrial sensor installed, the sensor stroke range is defined to end when the rod is retracted 5.1 mm from the fully extended position.
Rod addition (RA)	Rod addition is the amount of additional rod length, if any, that is specified in the FH model number (0…260 mm (in 10 mm increments), or 0…10 in. (in 0.5 in. increments)).	For some applications the option of extra rod length can simplify the installation. Also, various rod addition values are required for the bellows options to provide enough space on the rod for the retracted bellows.

Fig. 5: Description of the terms in the technical drawing in Fig. 4

OPTIONAL BELLOWS

Bellows provide wear and ingress protection for harsh applications with fine particulate, heavy dirt/debris or constant liquid accumulation. The standard bellows options are manufactured of rugged neoprene coated nylon fabric that is sewn together to fit various rod length ranges. They are suitable for operating temperature ranges of –40…+105 °C (–40…+220 °F). If your application requires a higher temperature, please contact applications engineering.

When selecting the bellows option, the appropriate character needs to be specified in the Follower Housing FH model number. The appropriate bellows option (characters A through E for the various size ranges) is determined by adding up the mechanical length and rod addition dimensions. Also, a minimum rod addition length is required based on the particular sized bellows needed. This minimum rod addition length ensures that there is enough space on the rod for storing the bellows when the rod is fully retracted (refer to the bellows selection table below).

Bellows selection							
Minimum required rod addition	120 mm	5 in.					E
	80 mm	3.5 in.				D	
	60 mm	2.5 in.			C		
	30 mm	1 in.		B			
	10 mm	0.5 in.	A				
	Millimeters	Inches	8.5 – 16.5 in.	17 – 22.5 in.	23 – 34.5 in.	35 – 44.5 in.	45 – 50.0 in.
			210 – 420 mm	430 – 570 mm	580 – 880 mm	890 – 1130 mm	1140 – 1280 mm
Mechanical length + rod addition							

Fig. 6: Bellows selection table

FREQUENTLY ORDERED AND OPTIONAL ACCESSORIES

Clamp blocks

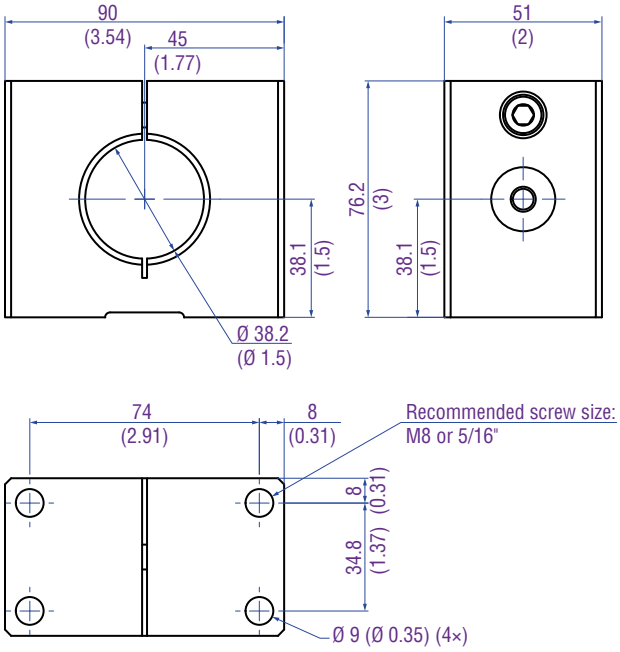

Large clamp block
Part no. 254 985

Material: Aluminum, hard anodized

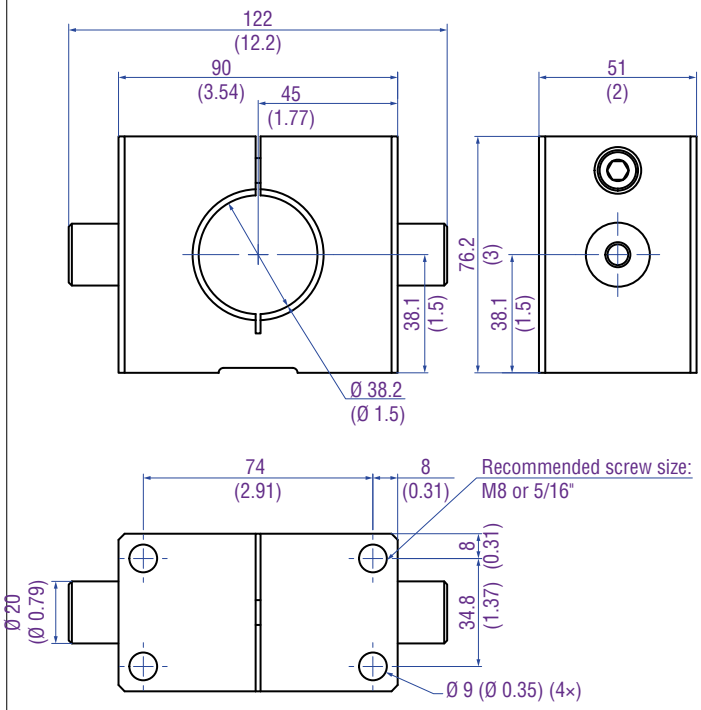

Large clamp block with trunnions
Part no. 254 984

Material: Aluminum, hard anodized

Controlling design dimensions are in millimeters and measurements in ( ) are in inches

Clamp blocks

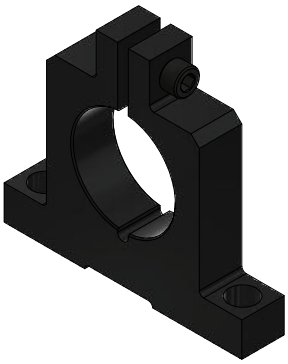

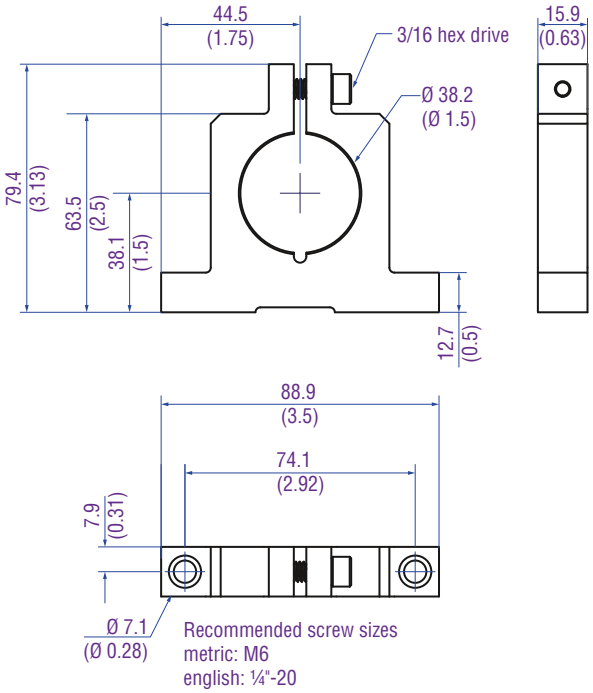

Clamps (2×) with edge tabs
Part no. 201 986

Material: Aluminum, hard anodized

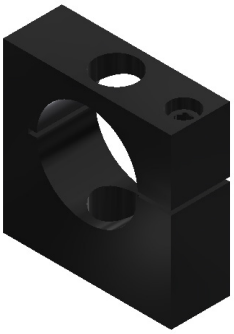

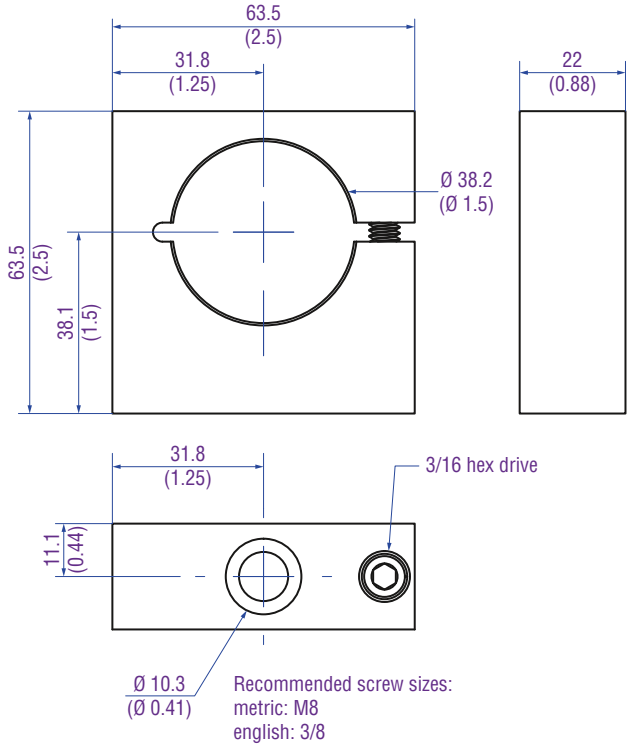

Clamps (2×) with center bolt-thru
Part no. 201 985

Material: Aluminum, hard anodized

Controlling design dimensions are in millimeters and measurements in ( ) are in inches

Clamp blocks

SAE 3/8"-24

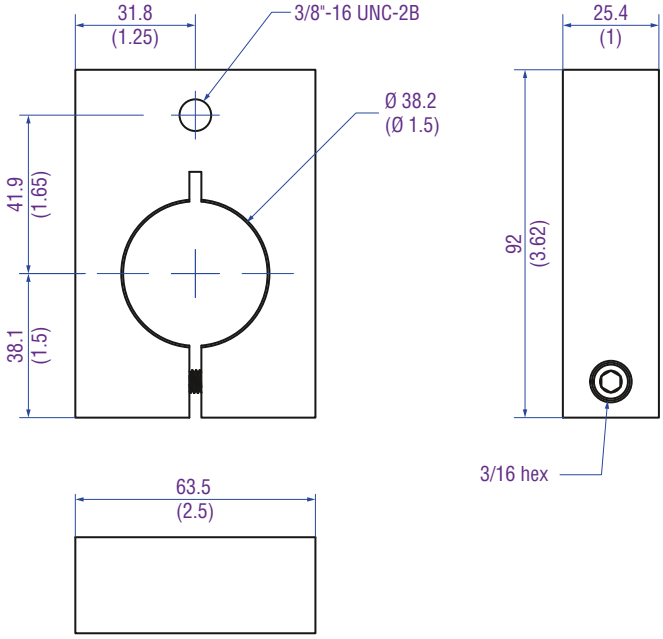

Clamp for rod eye, SAE threads 3/8"-24
Part no. 201 992-1

Material: Aluminum, hard anodized

Metric M10×1.5

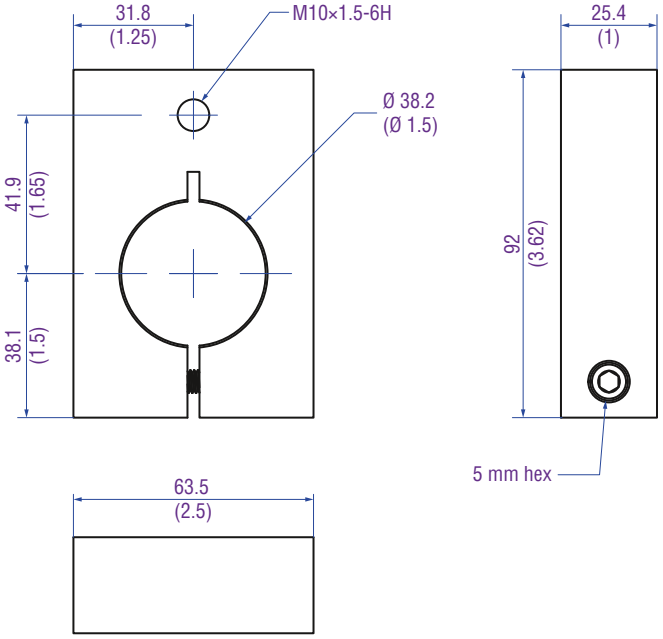

Clamp for rod eye, metric threads M10×1.5
Part no. 201 992-2

Material: Aluminum, hard anodized

Controlling design dimensions are in millimeters and measurements in ( ) are in inches

Bellows

Bellows different dimensions	
A	304.8 mm (12 in.), part no. 201 983-1
B	457.2 mm (18 in.), part no. 201 983-2
C	762.0 mm (30 in.), part no. 201 983-3
D	1016.0 mm (40 in.), part no. 201 983-4
E	1397.0 mm (55 in.), part no. 201 983-5
N	None

Controlling design dimensions are in millimeters and measurements in ( ) are in inches

ORDER CODE

1	2	3	4	5	6	7	8	9	10	11	12	13	14	15	16
F	H	1													
a		b	c	d	e					f		g	h		

a	Model
F H	Follower Housing Accessory

b	Style
1	Standard

c	Port type for sensor
M	For threaded flange M18×1.5-6g
S	For threaded flange ¾"-16 UNF-3A

d	Mounting style
C	Clamps (2×) with center bolt-thru (part no. 201 985)
E	Clamps (2×) with edge tabs (part no. 201 986)
L	Large clamp block (part no. 254 985)
N	None
R	Clamp for rod eye (hole threads defined in f)
T	Large clamp block with trunnions (part no. 254 984)

e	Mechanical length (ML)
X X X X M	0200…1020 mm
X X X . X U	008.0…040.0 in.
Must be encoded in 10 mm/0.5 in. increments.	

NOTICE
Note: ML ≥ sensor measurement stroke + 149.4 mm (5.9 in.)

f	Rod end
F M	Female metric threads M10
F S	Female SAE threads ⅜"-24
M M	Male metric threads M10
M S	Male SAE threads ⅜"-24

g	Bellows
A	304.8 mm (12 in.) (part no. 201 983-1)
B	457.2 mm (18 in.) (part no. 201 983-2)
C	762.0 mm (30 in.) (part no. 201 983-3)
D	1016.0 mm (40 in.) (part no. 201 983-4)
E	1397.0 mm (55 in.) (part no. 201 983-5)
N	None

h	Rod addition
X X X	000…260 mm (or 10…260 mm with bellows option selected)
X X . X	00.0…10.0 in. (or 00.5…10.0 in. with bellows option selected)
Must be encoded in 10 mm/0.5 in. increments.	
Encode in mm if using metric mechanical length. Encode in inches if using US customary mechanical length.	

Document Part Number:
552040 Revision A (EN) 07/2020

UNITED STATES
MTS Systems Corporation
Sensors Division
Phone: +1 919 677-0100
E-Mail: info.us@mtssensors.com

www.mtssensors.com